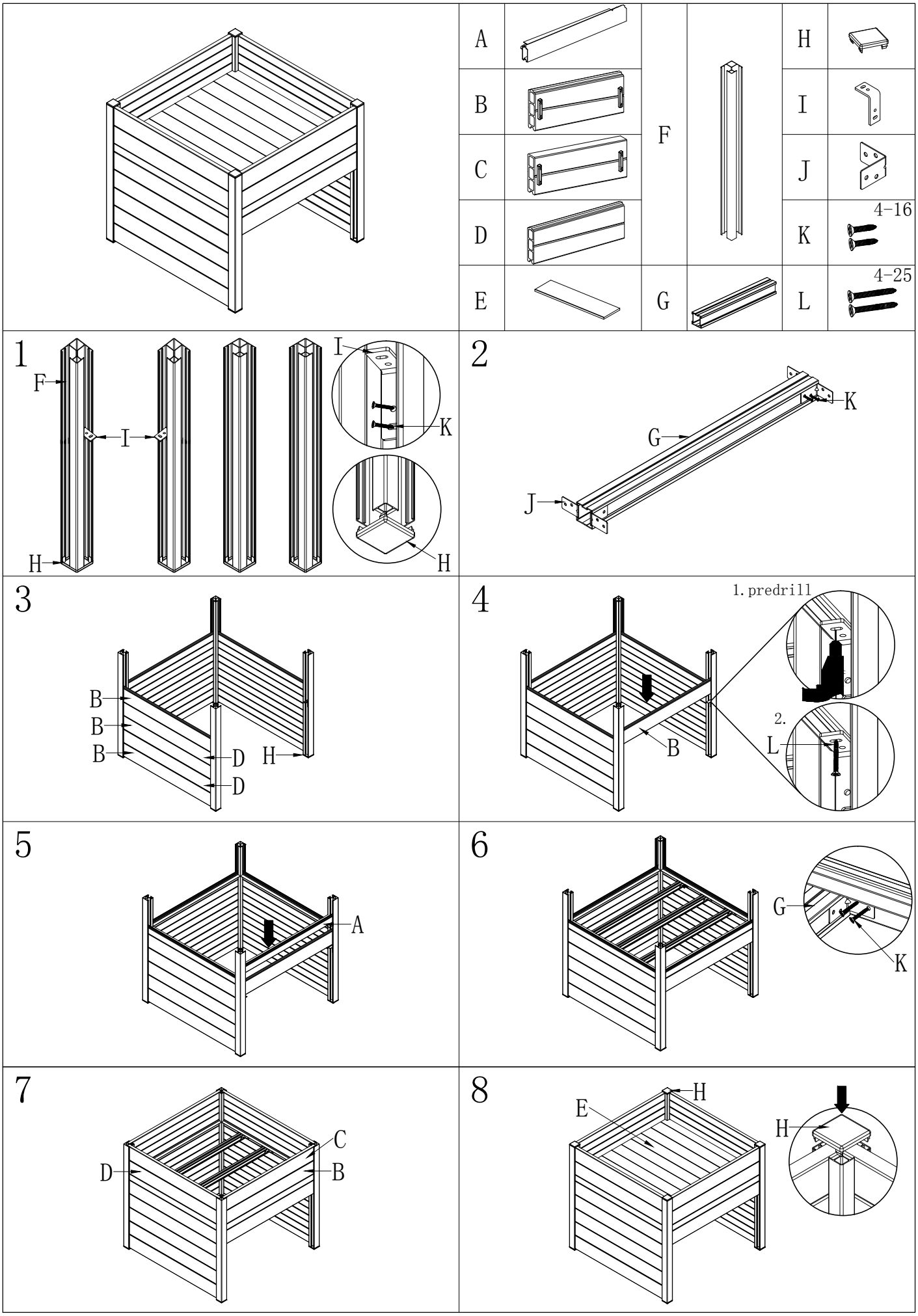
A
B
C
D
E
F
G
H
I
J
K
4-16
L
4-25
1
F
I
H
I
K
H
2
K
G
J
3
B
B
B
D
D
H
4
1.predrill
2.
B
L
5
A
6
G
K
7
C
D
B
8
H
E
H